Tube | Joints | Accessories

Presentation: Assembly instructions

Texam Ltd

Connect-A-tube Endless Possibilities

18th December 2014

Tubes

Various colours and types of tube available in stock

Safe working requirements

If necessary, wear gloves & safety shoes when handling bundles.
Wear safety goggles during cutting of pipes and roller track.
Always de-burr cut tubes and roller track.

The tube

All standard tubes have an outer diameter of 28mm. The tube is constructed from an inner steel tube with a bonded outer ABS plastic-coat in various colour finishes.

Stainless steel options are also available.

An anti-corrosion treatment is added to the inside of the ABS coated tubes. These ABS coatings provide a high-quality finish that optimizes the strength of the tubes and the clamping force of the joints.

There are also stainless steel tubes and aluminium profiles available in stock.

The stainless steel option can be applied in a hygienic or clean room environment or where appearance is important. It is also inherently ESD.

The tubes are available in standard lengths of 4 meters, they can also be cut to size for delivery to the customer. The standard wall thickness for general applications is between 0.7 and 1.1 mm & for heavy duty applications a 2mm tube is available.

Tube types

ABS Tube

Stainless steel tube

- Steel with an ABS coating to ensures a perfect finish.
- Constructed with a special adhesive between layers.
- In various colours, with special colours on request.
- ESD version available.
- Anti-rust coating on the inside ensures long life.
- Cost-effective solution.
- Outside diameter 28mm
- Available in 0.7mm, 1.0mm & 2.0 mm wall thickness.

- Chemicals and oil resistant.
- An environmentally friendly solution.
- Suitable for ESD applications.
- Outside diameter 28mm.
- Available in 1.2 mm wall thickness.
- According to Material type 201

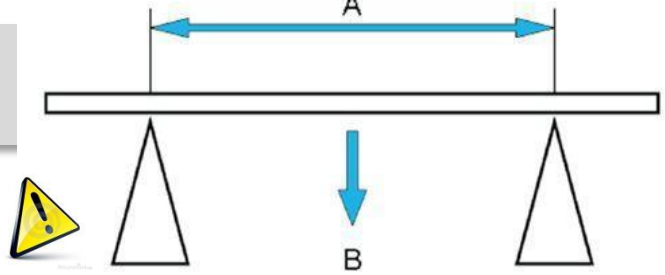

Tube types

A	500mm		750mm		1000m
B	5mm	10mm	10mm	20mm	20mm
ABS 0.7 mm	200 Kg	290 Kg	145 Kg	180 Kg	120 Kg
ABS 1.0 mm	230 Kg	310 Kg	160 Kg	230 Kg	140 Kg
ABS 2.0 mm	490 Kg	540 Kg	320 Kg	450 Kg	280 Kg
201 Stainless steel 1.2	370 Kg	490 Kg	225 Kg	310 Kg	180 Kg

Metal Joints

The Metal Joints

With the Connect-A-tube pipe and joint system you can realize almost all of your ideas when manufacturing equipment.
The metal joints connect the tubes securely together: Various shapes can be formed: such as square, straight, hinged and parallel arrangements. You can also combine the Connect-A-tube system with the aluminium profile system.
The metal joints are available in black or nickel coated options. There is also a portfolio of plastic parts that interact with the Connect-A-tube pipe and joint system.
Assembly of the system is achieved by using only a hex head M6 bolt in combination with a T-nut to prevent rotation, thus clamping the tubes and joints together.

Grip

A two ribbed patterns on the inside of the joint ensures an optimum grip.
Note: Always check that the tube is inserted fully into the joint (30mm) using the witness marks present on the joint in the area of the grip patterns.

Joint strength

Each joint has a maximum load capacity of 80Kg in shear before slippage of the join occurs. This is based on an approximate bolt torque of 10Nm for a joint assembly

Design

Connect-A-tube uses only high quality steel for its joints.
The holes in the joints for the bolts are punched post forming to retain the shape of the hole. The steel used for the joints is 2.5 mm thick

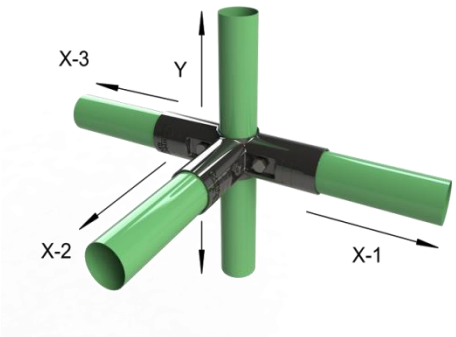
X-3
Y
X-2
X-1

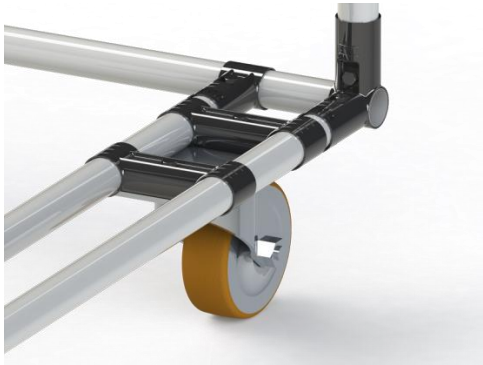

Roller track

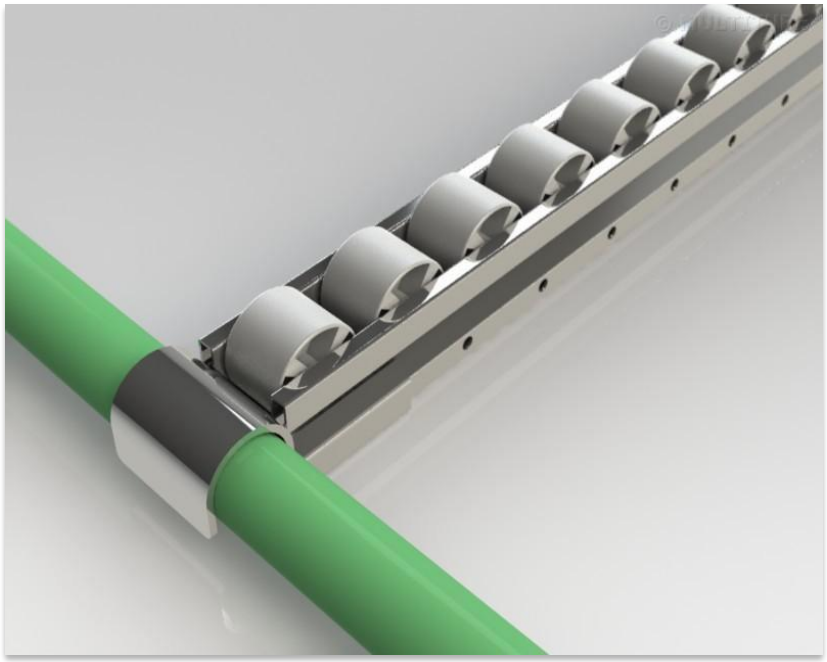

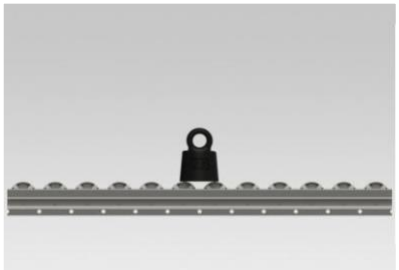

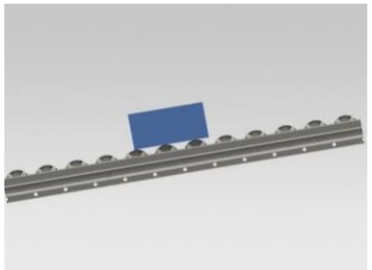

Maximum load per meter.
40mm wheel Dia 30 : 100 kg
73mm wheel Dia 34 : 215 kg
73mm wheel Dia 18 : 225 Kg

Minimum recommended angle.
40mm: 5 degrees
73mm: 7 degrees
Depending on the product surface.

Assembly

The roller track can easily be assembled by fixing it to the tube via the roller track end fittings.

Length

Roller track comes in standard lengths of 4 meters. Pre cut lengths can also be supplied on request.

Braking system

A Braking system can be applied at the end of the roller track to reduce the momentum of the box or package at the end of the run via a brake that fits over the roller track

Maximum length

If the roller track length is longer than 1500mm it is recommended that a support is place to prevent distortion.

Roller track

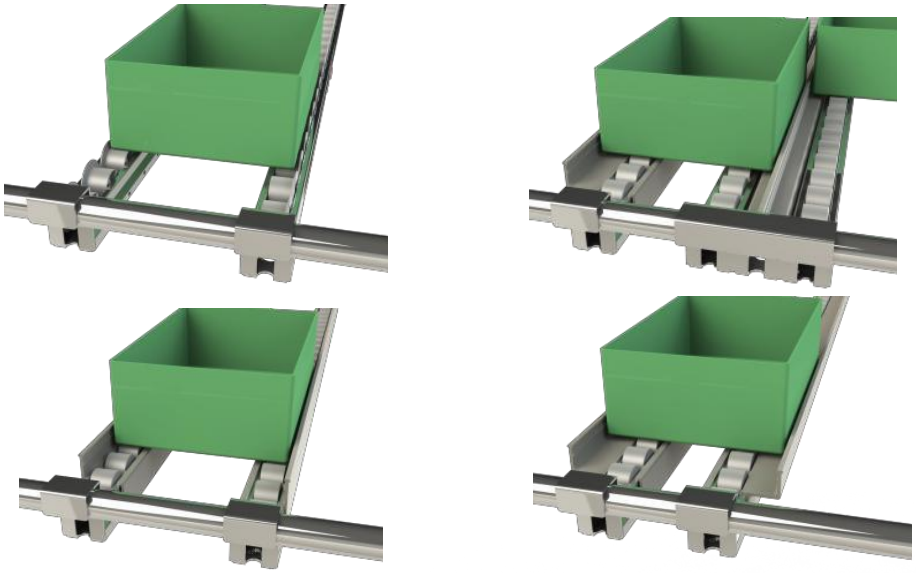

Various mounting options and plastic profiles.

Mounting

First determine the length of the roller track and plastic guide profile. Then slide the roller track into the plastic guide. After which attach the brackets to the ends.

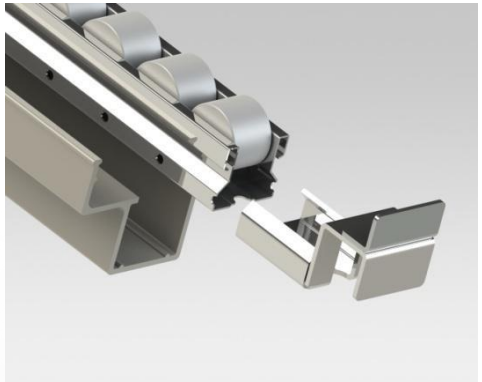

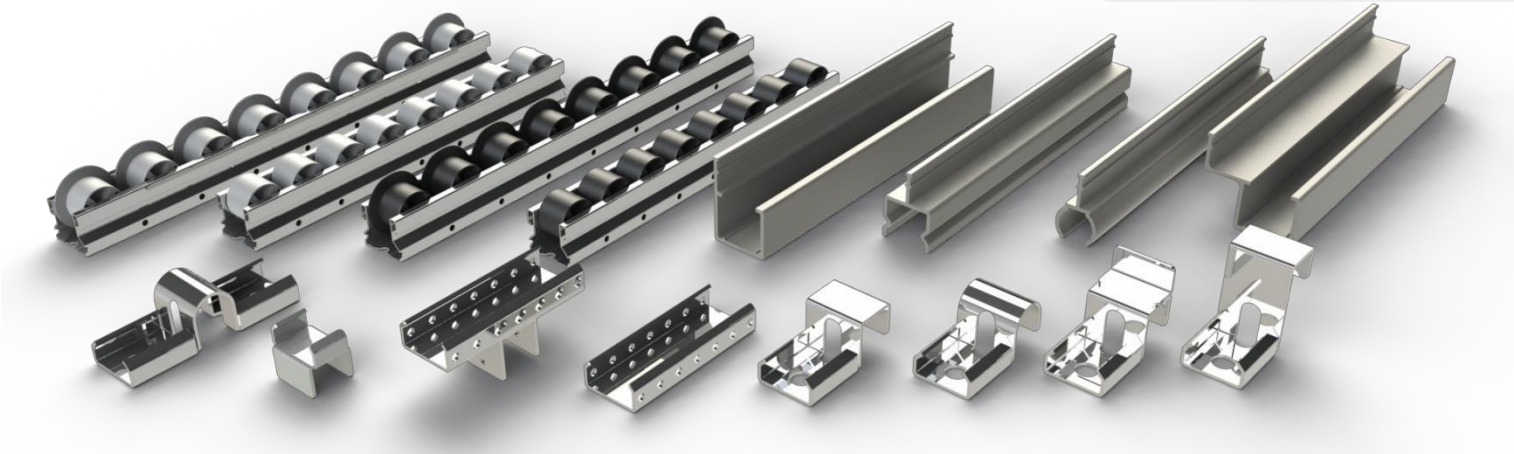

Overview of basic roller track components from Connect-A-tube

Calculate the tube length

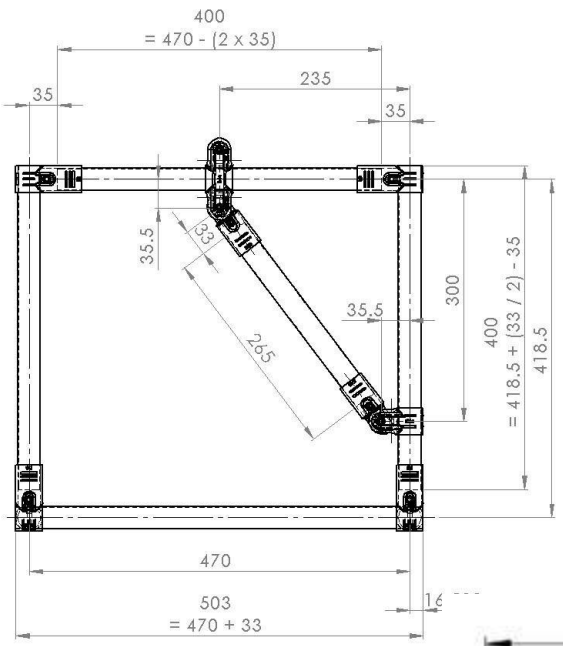

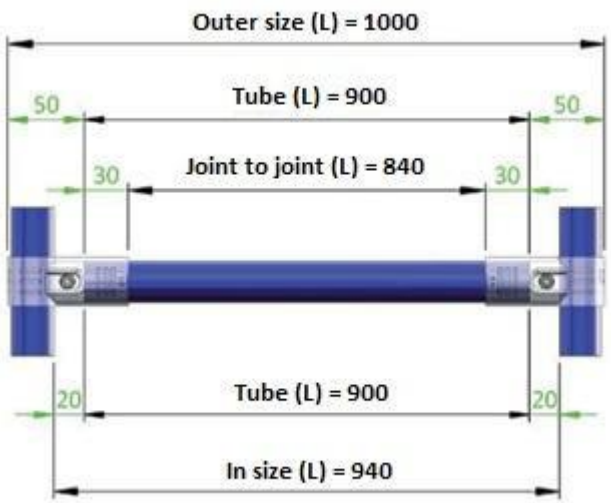

The Grip

A two rib patterns on the inside of the joints ensure optimum grip.

Dimensions

Tubes have a nominal diameter of 28mm.
Joint have an inside diameter of 28mm and an outside diameter of 33mm.

Calculations

You can easily determine the dimension of most tube lengths by the following equation:
Structure width - 100 mm

For example:
Table width= 800 mm
Required tube length 700mm

Proper use of joints

Corner connections

Whenever possible use angles for inner and outer corner (E-2 + E-3) connector to prevent distortion.
Use of connector type E1 in the construction shown can lead to deformation.
As a rule of thumb: At least three fixed angles at the base of the structure

Torque requirements

Tighten nuts and bolts to between 10 Nm and 12 Nm. This may be done via hand with a 5mm Allen key

Use the long side of the key as a lever and tighten the bolt firmly.

Ensure that all construction bolts are properly tightened.
When in doubt, use a torque wrench!

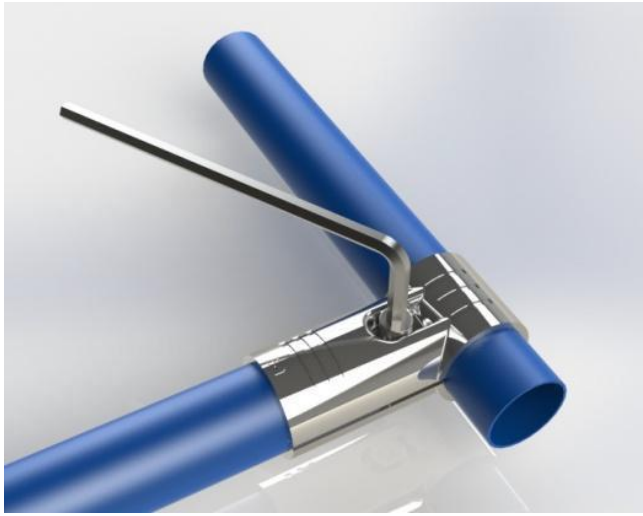

Proper use of joints

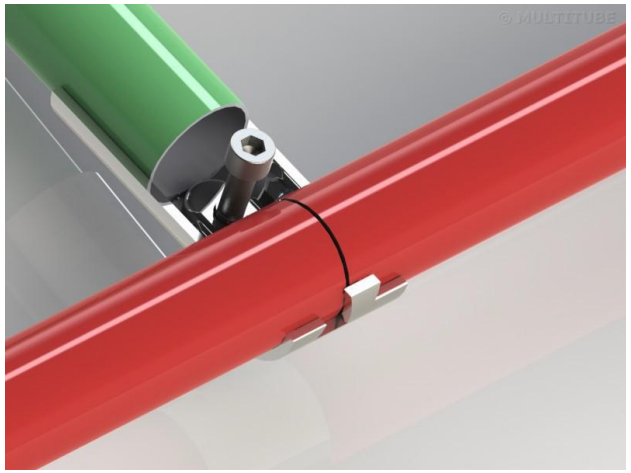

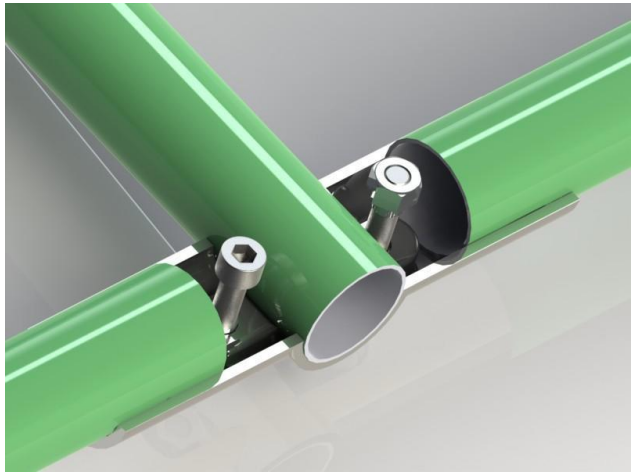

Grip points

Each set of grip-points in a joint is only suitable for use with one tube. The joint should not be used to extend pipes!
For example use the correct joint designed for the application you are working on.

Gripping

Attach tubing joints correctly.

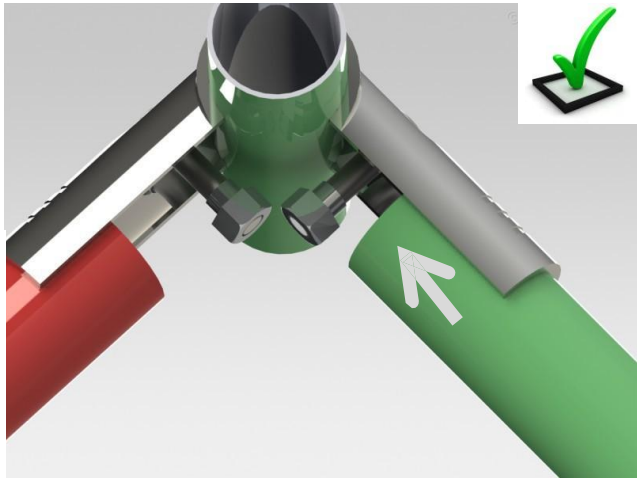

Maximum unsupported free span

Support required when the spans is over
f the

Span

Horizontal tubes and roller track longer than **1500mm** should be supported by vertical or diagonal tubes. Given the wide variety of solutions existing this information is given as a guideline only.

Support

Use of a vertical tubes, diagonal tubes or a double tube arrangement can be used to prevent deflection. Combinations of these options are also possible and commonly used.

Maxim span

Use of a double tube structure to prevent deflection. Apply this principal to at least three areas in the construction.

Divide the structure into smaller areas.

Use brace tube for support along with the 45 degree connectors or flexible angle connectors.

Wheel selection and assembly

Plated Wheels

Plate wheels are used in the following situations:
- Where the load exceeding 200 kilograms
- Uneven floor surface.
- Where wheels must be contained within the frame of the structure.

Place wheels at least 500mm apart from each other in order to prevent tipping and stability issues.

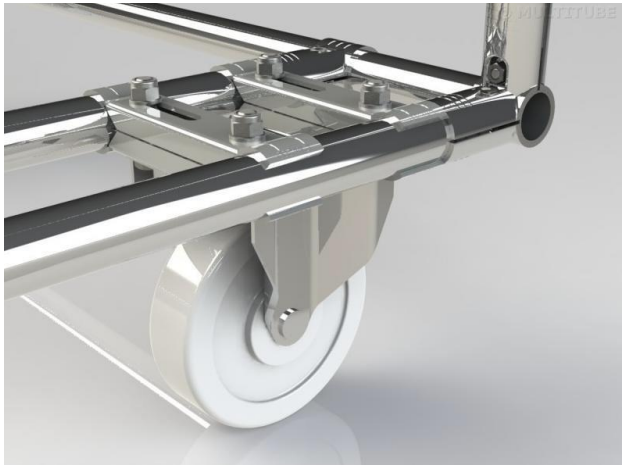

Required fixings: M8 nuts & bolts with a washer along with special fittings for wheel attachment.

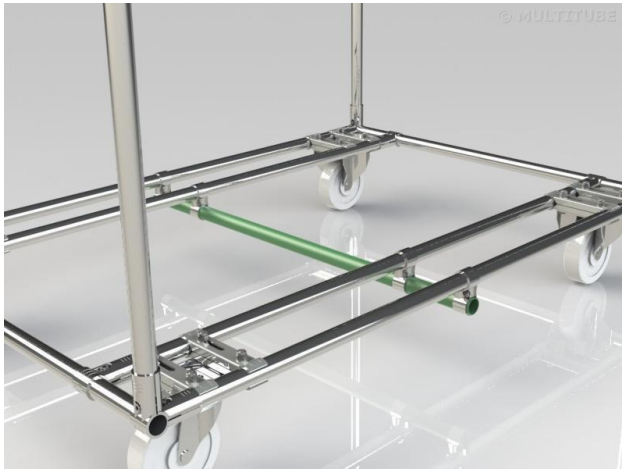

A tube can be attached to prevent distortion of the base if required.

Wheel selection and assembly

Inserted wheels

With the use of an insert you simply attach wheels by inserting a threaded steel bush into the tube. This insert has a M10 or M12 thread that will be used for attachment of the wheel. The use of a M10 or M12 fastening system comprising a bolt and a spring washer that is required to fit the wheel. Used in heavy applications it is advisable to use Loctite or another high performance industrial adhesives.
The required insert depends on the type of tube and it's diameter also the hole size in the wheel. De-burring of tubes are necessary to ensure a correct fit with the bushing.

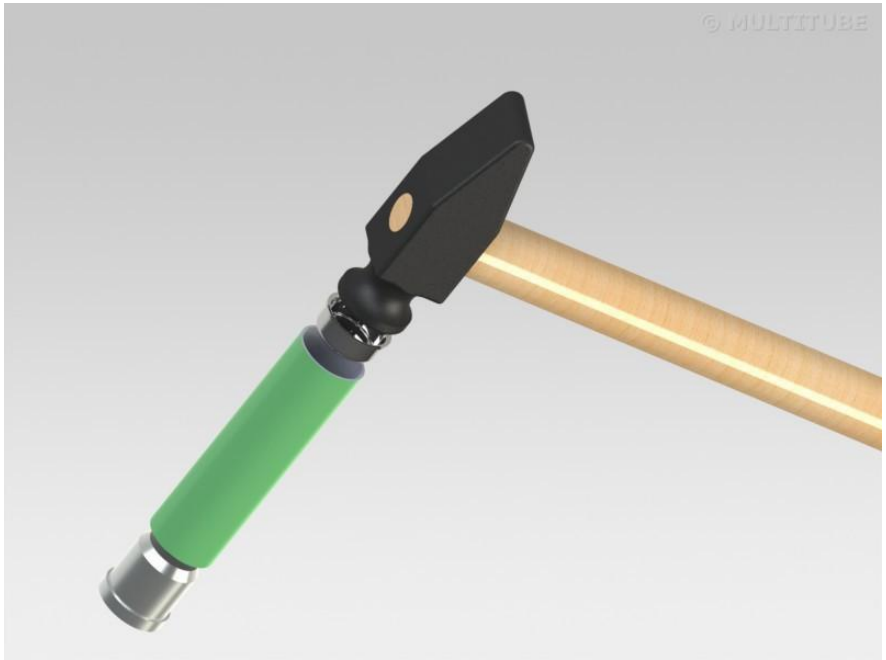

Feet type and assembly

Rubber feet

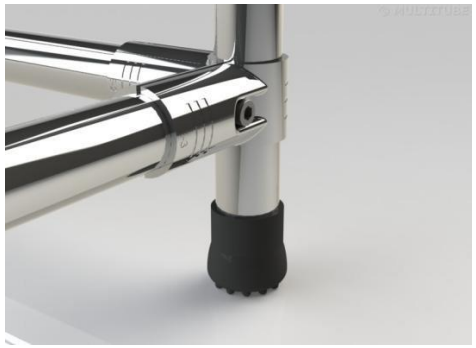

Joints for attachment

Steel feet & inserts

Using diagonals

The use of fixed or flexible angles joints to form diagonals.

The use of standard connectors to form diagonal.

Diagonals

Use diagonals to ensure structural stability. Diagonals are to be placed between a horizontal and a vertical tube.

Diagonals should always be used in a mobile structure and also in equipment using roller track.

Types of diagonals

The range of joint available offers multiple options when adding diagonals. Both the angle connectors, flexible angle connectors and standard connectors can be used depending on the design and orientation of the tube With the flexible angle joint you can virtually form any angle you require.

The building of a flow rack (version 1)

Modular units used for line side picking.

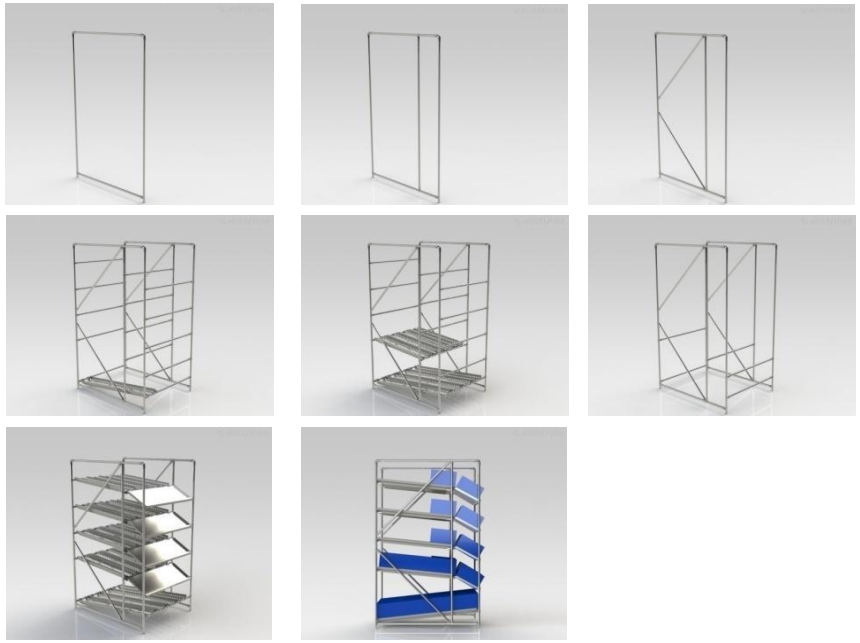

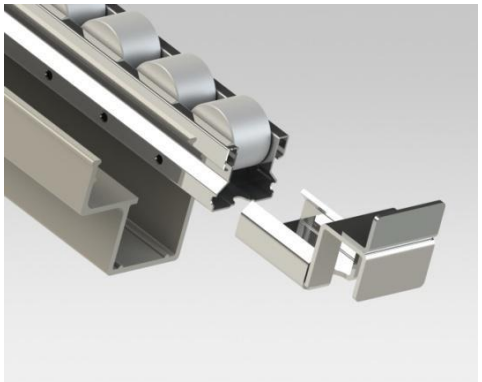

First determine the length of the roller track and plastic guide. Then slide the roller track into the plastic guide. After which attach the brackets to the ends.

Various combinations of track angle are possible this being dependent on the application. The return of the boxes in this case are at the top of the rack.

Various combinations are possible: This the unit is mobile to allow for cleaning and relocation.

The building of a flow rack (version 2)

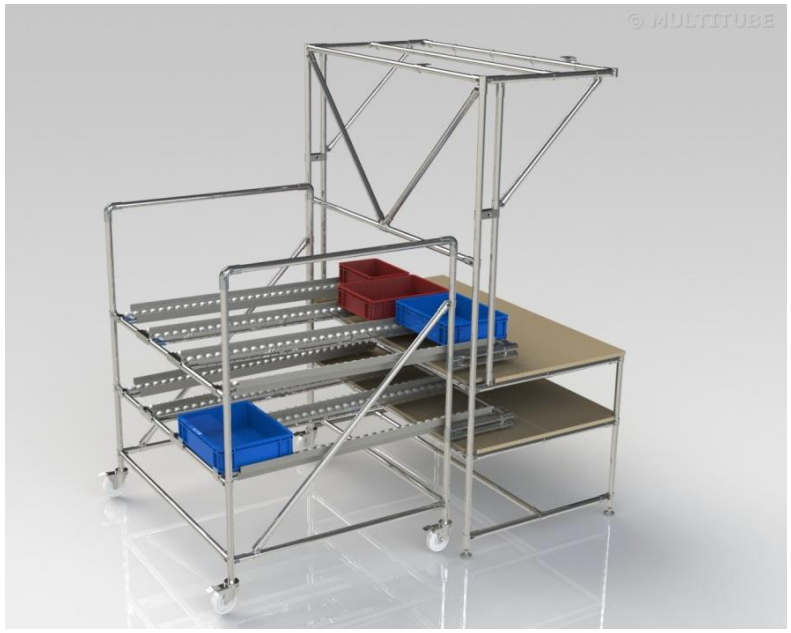

A flow rack application in combination with a workstation

An overview of plastic guide options shown below

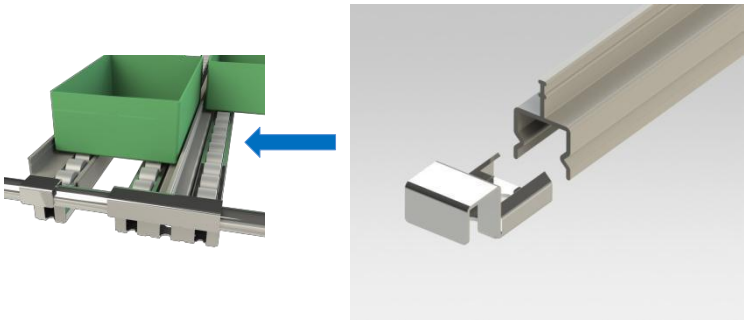

Offset profile in combination with flat roller tracks, and a centre guide profile.

Offset profile in combination with flat roller track.

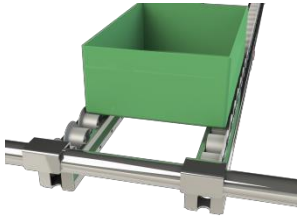

Flanged rollers act as railroad tracks for guiding containers and boxes.

Flat roller in combination with fitted profile.

The building of a transport trolley

Exploded view of a transport trolley

Tigh 12 Nm d)

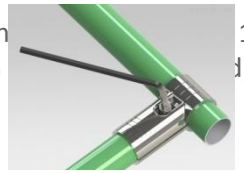

Make proper use of the system

Exploded view
Plate wheel mounting

Exploded view
Assembly of joints E2 & E3

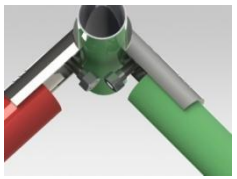

Number off	Reference	Description
		Tube and end caps
6	SUS2812	Type 201 Stainless steel 28Dia 1.2 thickness
8	CAP-03	Plastic end cap
		Joints
8	E-1-NI	90° right angle (Nickel)
28	E-2-NI	90° inner elbow (Nickel)
20	E-3-NI	90° outer elbow (Nickel)
4	E-4-NI	180° Straight (Nickel)
8	E-13-NI	90° corner piece, right angle (Nickel)
18	E-15A-NI	Mounting clamp flat (Nickel)
18	E-15B-NI	Mounting clamp round (Nickel)
60	M0625	M6 Bolt X 25mm Long (silver)
78	TN06	M6 T-Nut (silver)
		Wheels and fasteners
16	CM200	Castor strap
32	BT-0845	M8 Bolt x 45 Long
32	NN-0800	M8 lock nut Nylon
32	NS 007 HB	M8 Washer
4	HPL125WB	Plated casters with brake. Dia 125 Load rating 120Kg

The building of a work station

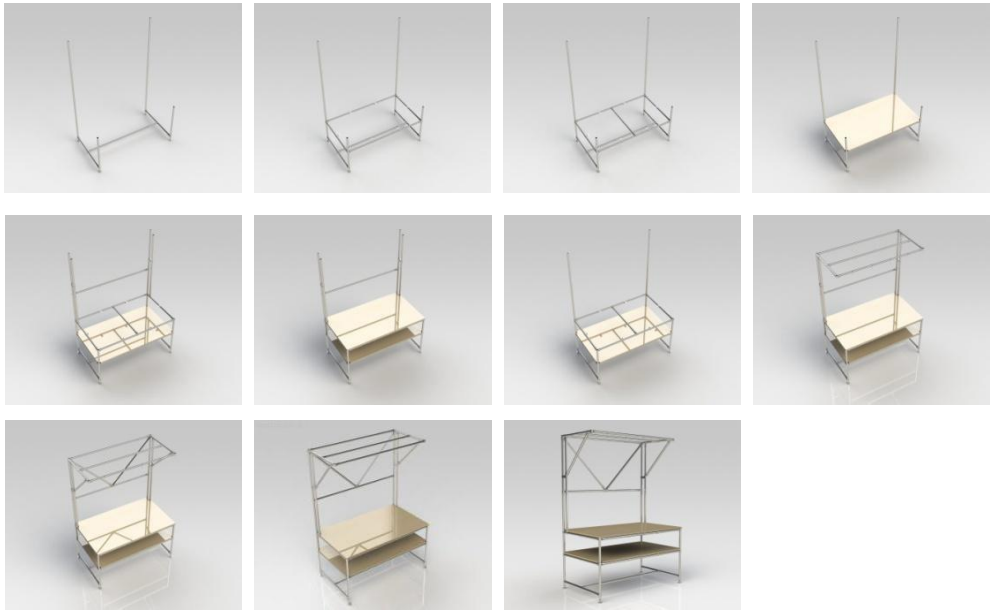

Exploded view of a workstation

Workstation with mobile flow rack to feed the workstation.

Each workstation is a customized solution. A variety of items can be added.

- Displays boards.
- Lighting
- Tool holders
- Fixed containers.
- Etc.

Applications base on weight

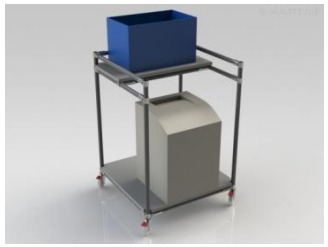

Very Light

< 70 kilo

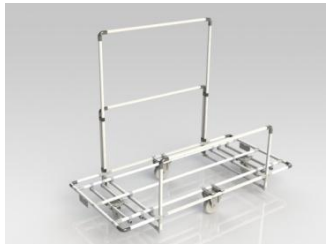

Applications base on weight

Light

< 140 kilo

Medium

< 250 kilo

Heavy

- 250 kg load.
- Design by a Key Player.
- Checked & approved by another Key player.

Safe working checklist

Safety

Each piece of equipment must meet national safety regulations with respect to stability and robustness.

- ✓ Equipment and other structures must consist of durable materials.
- ✓ Are of sound design and construction.
- ✓ Are in a state such that there is no danger of collapse.
- ✓ No danger of the structure falling over.

The workplace must be arranged as follows.

- ✓ The objects or substances present in that area cause no danger to the safety of staff .
- ✓ No objects present a health hazard through collapse, shifting, rolling or tipping.

Safety Training

Safety is of key importance at all times. A system that can provide 1001 different solutions can also make it possible to construct equipment that can be unsafe. Texam Limited has attempted in this document to cover all aspects of constructing safe equipment. The advice given in this document is general advice and the end user must ensure the safety of their equipment. (refer to PUWER, provision and use of work equipment regulations)

Texam Limited makes a clear difference between staff with basic training and staff with advanced design training. Most staff will add to their proficiency by continually using Connect-A-tube. Advice should be sought when constructing equipment to carry loads heavier than 200kgs.

No staff should deviate from the guidelines given in the assembly manual.

If in doubt contact us on +44 28 92674137 for advice

Safe working checklist

Dynamic operation

In a dynamic setup (including wheels or roller track), the expected maximum load of the work piece must be multiplied by a factor of 1.5

For example:
Concept : mobile setup with roller track.
Load: 100 Kg.

For a dynamic structures this will be : load = 100Kg x 1.5 = 150 Kg
This would fall into the category belongs to: Medium range <250 kg load.
Therefore seek proper design advice

Specification

Category

- Check in which category the structure falls into.

- Read assembly instructions.

- Structures in gray areas need advice from Texam Limited

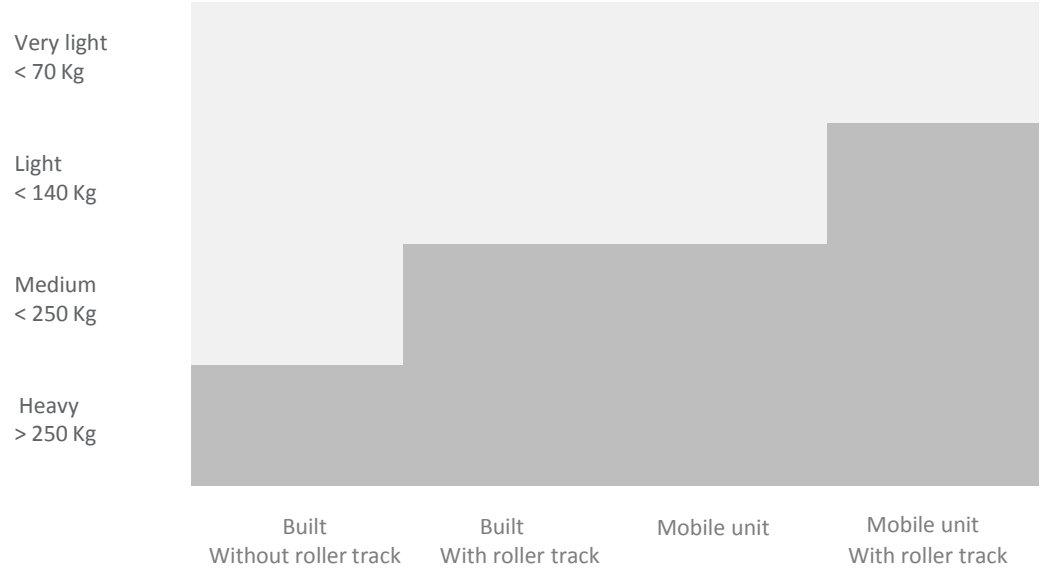

Safe working checklist

Concerns

Control and monitoring of newly build structure: ○ Nr._____

Control and monitoring of modifications: ○ Nr._____

Control

Inhouse control and buyoff : _____

Contractor control and buyoff: _____

Date of control and buyoff : _____

Date of next inspection (month/half yearly /yearly _____

Part number of equipment: _____

Location (number): _____

Year: _____

Serial number (Number of times modified.) _____

Function

Function of the equipment:

_____

_____

_____

Safe working checklist

Design details

Weight Estimate	_____Kg
With wheels	Yes / No
With roller track	Yes / No
Key-player approval necessary?	Yes* / No *(Ask for approval)
Length.	_____cm
Width.	_____cm
Height.	_____cm
Height to width (smallest side) ratio: Ratio less than 3 : 1?	Yes /No* *(revise the design)

Sketch	Cutting sizes

Texam Limited
Unit 28 Blaris Industrial Estate,
Altona Road,
Lisburn
Co Antrim
Northern Ireland BT27 5QB

Contact information
Tel: +44 28 92674137
E-mail sales@texam.ltd.uk
Web www.connect-a-tube.com